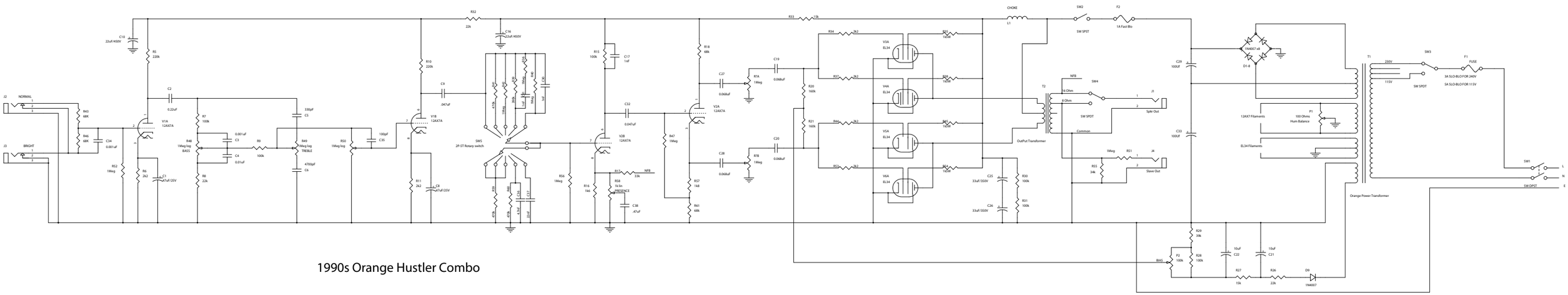

1990s Orange Hustler Combo